Wiring Diagram

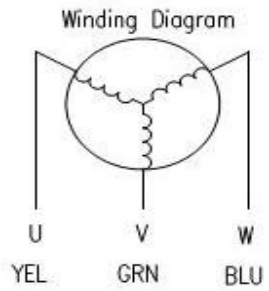

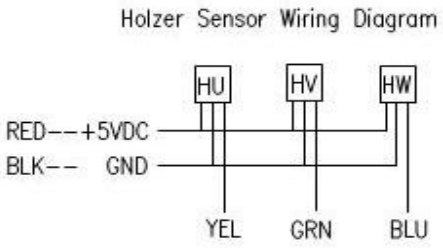

Appearance Size & Motor Installation

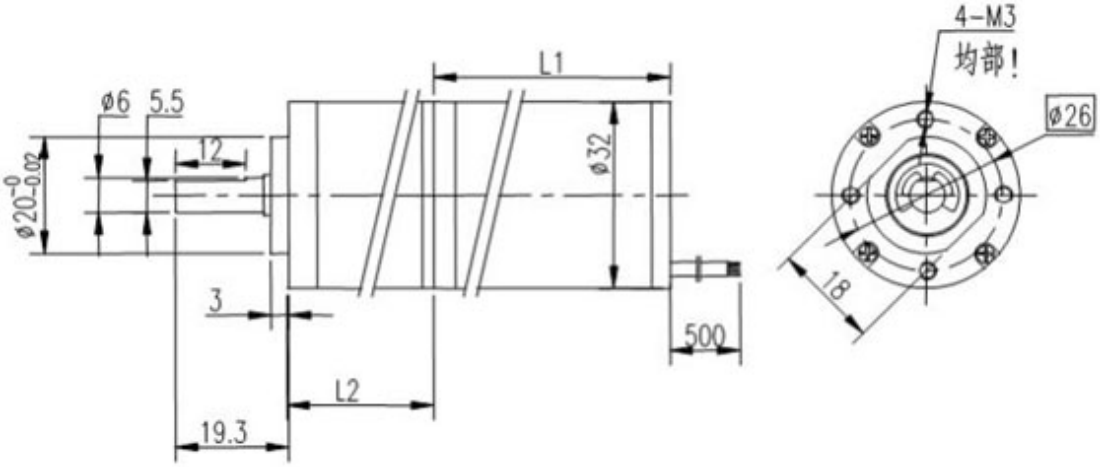

Motor Electrical Specification

Motor Model	D325-10W	D325-10W	D325-20W
Rated Voltage(VDC)	24	24	24
Rated Speed(Rpm)	3000	3000	3000
Rated Torque(N.m)	0.03	0.045	0.06
Rated Power(W)	10	15	20
L1 Length(mm)	56	66	76

Gearbox Electrical Specification

Reducer Series	1	2	3
Transmission efficiency	90%	81%	73%
Max radial load	35N	35N	35N
Max axial load	25N	25N	25N
Transmission torque	1N.m	1.2N.m	2.5N.m
Reduction Ratio	3.7,5.18,6.75	14,19,25,27,35,45	51,71,93,100,139,181,236,307
L2 Length(mm)	25.6	34	42

* Note: We can manufacture products according to customer's requirements.
Optional accessory is the encoder and brake to match this product.

* Contact sales@ichmo.com.

©I.CH Motion® 2020 www.ichmo.com
Specifications subject to change without notice. Series: DG325 BLDC MOTOR