I.CH MOTION CO., LTD
MOTION WORLD

# I.CH Linear Stepper Motor



**I.CH Motor** supply PM linear stepper motor. The L series PM linear stepper motors are optimized for superior torque characteristics.

Motors may be customized with value added features including, but not limited to : encoders, shaft details, leadwire-connector assemblies and more.

All specification shown are typical at 20℃ unless otherwise noted.

**Shaft extensions**

All motors can be supplied with single or double ended shaft

**Rotation**

The motor rotation can rn clockwise or counterclockwise, depending on the commutation.

**Operating temperature**

Ambient operating temperature : -20℃ to +125℃

## Product Number Code For PM Stepping Motor

L 25 1 - 040 20 xx

- L — Linear Motor
- 25 — Motor Frame Size (mm)
- 1 — 1= Non Captive; 2=Captive; 3= Special
- 040 — Stroke: 040=40mm
- 20 — Force: 20=20N; 55=55N
- xx — XX is Identify numbe

# L251-110 (25mm) SERIES LINEAR STEPPER MOTOR DATA

## GERNERAL SPECIFICATIONS

Resistance Accuracy --------- ±10%
Inductance Accuracy --------- ±20%
Operating Temp Range ------ -40℃~125℃
Storage Temp Range -------- -30℃~80℃
Insulation Resistance ------ 500Mohm Min at 500VDC
Life Time-----1,500,000 returns(advance 128m,backing out 128mm)
Protection Rate ---------- IP34
Lead Wire ---------- AF-200

## Picture



## Electrical Specification

| Series Model | Rated Voltage (v) | No.of phase | Rated Current (A) | Phase Resistance (ohm) | Phase Inductance (mH) | Travel per Step Avail (mm) | The Mark Thrust (N) | The Mark Pull (N) | After All Journey (mm) | Motor Wgt (g) |
|---|---|---|---|---|---|---|---|---|---|---|
| **L251-11025** | 12 | 2 | 0.23 | 53 | 23.5 | 0.0417 | 25 | 25 | >=110 | 41.8 |
| **L251-11020** | 5 | 2 | 0.5 | 10 | 4.7 | 0.0417 | 20 | 20 | >=110 | 47 |

## Mechanical Dimensions

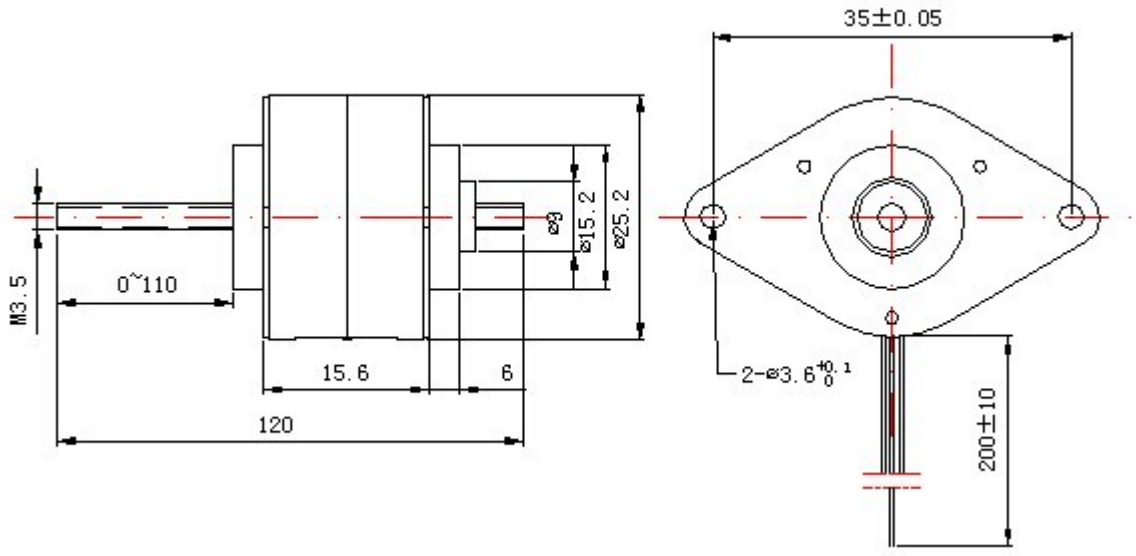


## Standard Leadwire Configuration

4 leads

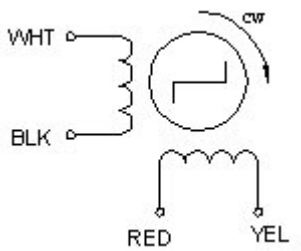


| Wire Color | Step | | | |
|---|---|---|---|---|
| | 1 | 2 | 3 | 4 |
| WHT | - | | | - |
| BLK | | - | - | |
| RED | - | - | | |
| YEL | | | - | - |

# L251-040 (25mm) SERIES STEPPER MOTOR DATA

## GERNERAL SPECIFICATIONS

Resistance Accuracy --------- ±10%
Inductance Accuracy --------- ±20%
Operating Temp Range ------ -40℃~125℃
Storage Temp Range -------- -30℃~80℃
Insulation Resistance ------ >100Mohm Min at 500VDC
Life Time ----- 1,500,000 returns (advance 39m, backing out 39mm)
Protection Rate ---------- IP34
Lead Wire ---------- AF-200

## Picture



## Electrical Specification

| Series Model | Rated Voltage (v) | No.of phase | Rated Current (A) | Phase Resistance (ohm) | Phase Inductance (mH) | Travel per Step Avail (mm) | The Mark Thrust (N) | The Mark Pull (N) | After All Journey (mm) | Motor Wgt (g) |
|---|---|---|---|---|---|---|---|---|---|---|
| **L251-04070** | 6 | 2 | 0.5 | 12 | 5.2 | 0.0417 | 7.5 | 7.5 | >=40 | 36.5 |
| **L251-04033** | 12 | 4 | 0.5 | 24 | 5.2 | 0.0417 | 33 | 33 | >=40 | 43.5 |
| **L251-04008** | 5 | 2 | 0.14 | 35 | 15.1 | 0.0417 | 8 | 8 | >=40 | 37.5 |

## Mechanical Dimensions

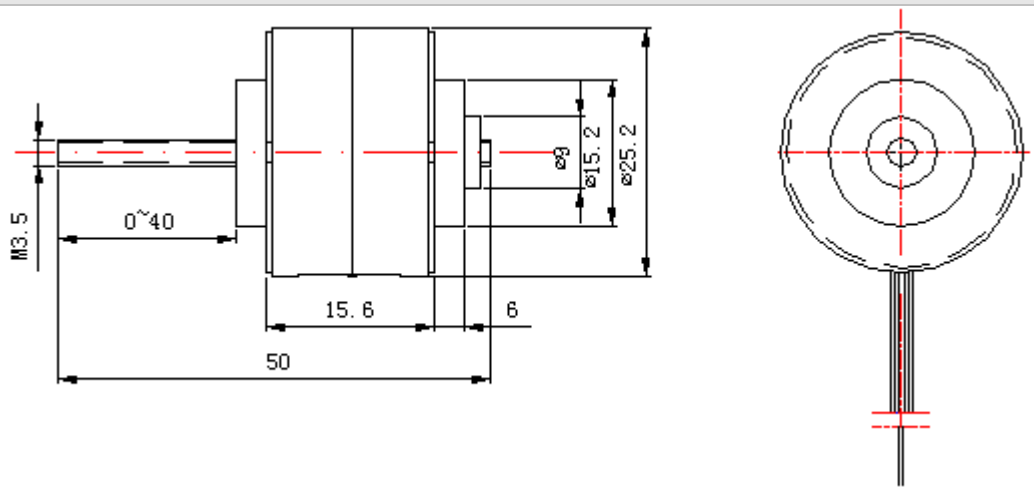


## Standard Leadwire Configuration

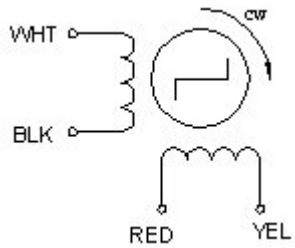


| Wire Color | Step | | | |
|---|---|---|---|---|
| | 1 | 2 | 3 | 4 |
| WHT | - | | | - |
| BLK | | - | - | |
| RED | - | - | | |
| YEL | | | - | - |

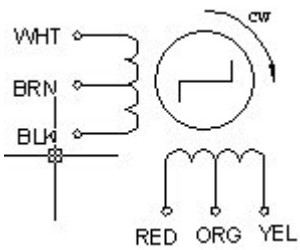


| Wire Color | Step | | | |
|---|---|---|---|---|
| | 1 | 2 | 3 | 4 |
| WHT | - | - | | |
| BRN | + | + | + | + |
| BLK | | | - | - |
| RED | | - | - | |
| ORG | + | + | + | + |
| YEL | - | | | - |

# L251-128 (25mm) SERIES STEPPER MOTOR DATA

| GERNERAL SPECIFICATIONS |
|---|
| Resistance Accuracy --------- ±10% |
| Inductance Accuracy --------- ±20% |
| Operating Temp Range ------ -40℃~125℃ |
| Storage Temp Range -------- -30℃~80℃ |
| Insulation Resistance ------ >100Mohm Min at 500VDC |
| Life Time --- 1,500,000 returns (advance 128m, backing out 128mm) |
| Protection Rate ---------- IP34 |
| Lead Wire ---------- AF-200 |

**Picture**



**Electrical Specification**

| Series Model | Rated Voltage (v) | No.of phase | Rated Current (A) | Phase Resistance (ohm) | Phase Inductance (mH) | Travel per Step Avail (mm) | The Mark Thrust (N) | The Mark Pull (N) | After All Journey (mm) | Motor Wgt (g) |
|---|---|---|---|---|---|---|---|---|---|---|
| **L251-12825** | 12 | 4 | 0.23 | 53 | 23.50 | 0.0417 | 25 | 25 | >=128 | 41.80 |

**Mechanical Dimensions**

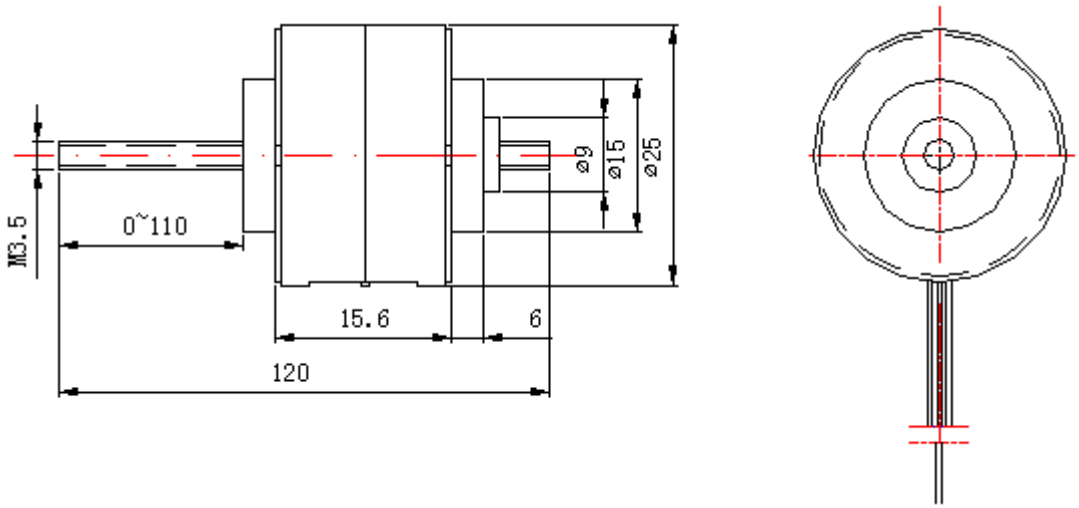


**Standard Leadwire Configuration**

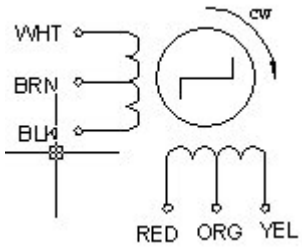


| Wire Color | Step | | | |
|---|---|---|---|---|
| | 1 | 2 | 3 | 4 |
| WHT | - | - | | |
| BRN | + | + | + | + |
| BLK | | | - | - |
| RED | | - | - | |
| ORG | + | + | + | + |
| YEL | - | | | - |

# L351 (35mm) SERIES LINEAR STEPPER MOTOR DATA

## GERNERAL SPECIFICATIONS

Resistance Accuracy --------- ±10%
Inductance Accuracy --------- ±20%
Operating Temp Range ------ -40℃~125℃
Storage Temp Range -------- -30℃~80℃
Insulation Resistance ------ >100Mohm Min at 500VDC
Life Time ----- 1,500,000 returns (advance 39m, backing out 39mm)
Protection Rate ---------- IP34
Lead Wire ---------- AF-200

## Picture



## Electrical Specification

| Series Model | Rated Voltage (v) | No.of phase | Rated Current (A) | Phase Resistance (ohm) | Phase Inductance (mH) | Travel per Step Avail (mm) | The Mark Thrust (N) | The Mark Pull (N) | After All Journey (mm) | Motor Wgt (g) |
|---|---|---|---|---|---|---|---|---|---|---|
| **L351-07555-01** | 5 | 2 | 0.46 | 11 | 8.6 | 0.0254 | 55 | 55 | >=75 | 86 |
| **L351-07555-02** | 12 | 4 | 0.8 | 15 | 5.2 | 0.0254 | 55 | 55 | >=75 | 86 |
| **L351-07055** | 12 | 4 | 0.8 | 15 | 5.2 | 0.0254 | 55 | 55 | 70 | 86 |

## Mechanical Dimensions

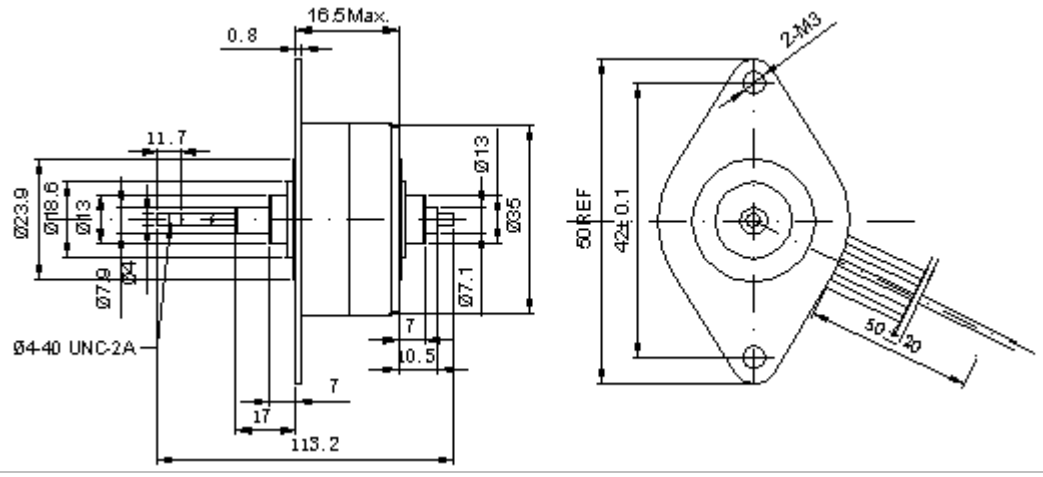


## Standard Leadwire Configuration

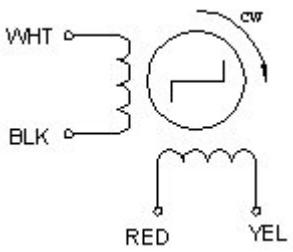


| Wire Color | Step 1 | 2 | 3 | 4 |
|---|---|---|---|---|
| WHT | - | | | - |
| BLK | | - | - | |
| RED | - | - | | |
| YEL | | | - | - |

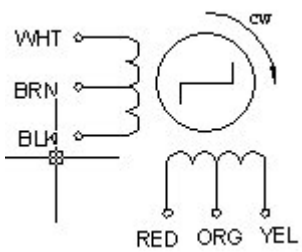


| Wire Color | Step 1 | 2 | 3 | 4 |
|---|---|---|---|---|
| WHT | - | - | | |
| BRN | + | + | + | + |
| BLK | | | - | - |
| RED | | - | - | |
| ORG | + | + | + | + |
| YEL | - | | | - |

# L252-012 (25mm) SERIES LINEAR STEPPER MOTOR DATA

## GERNERAL SPECIFICATIONS

Resistance Accuracy --------- ±10%
Inductance Accuracy --------- ±20%
Operating Temp Range ------ -40℃~125℃
Storage Temp Range -------- -30℃~80℃
Insulation Resistance ------ >100Mohm Min at 500VDC
Life Time ----- 1,500,000 returns (advance 11m, backing out 11mm)
Protection Rate ---------- IP34
Lead Wire ---------- AF-200

## Picture




## Electrical Specification

| Series Model | Rated Voltage (v) | No.of phase | Rated Current (A) | Phase Resistance (ohm) | Phase Inductance (mH) | Travel per Step Avail (mm) | The Mark Thrust (N) | The Mark Pull (N) | After All Journey (mm) | Motor Wgt (g) |
|---|---|---|---|---|---|---|---|---|---|---|
| **L252-01255** | 24 | 2 | 0.45 | 53 | 22.4 | 0.0417 | 50 | 50 | >=12 | 45 |
| **L252-01225 -01** | 12 | 2 | 0.23 | 53 | 23.5 | 0.0417 | 25 | 25 | >=12 | 45 |
| **L252-01215** | 12 | 4 | 0.23 | 53 | 9 | 0.0417 | 15 | 15 | >=12 | 45 |

## Mechanical Dimensions

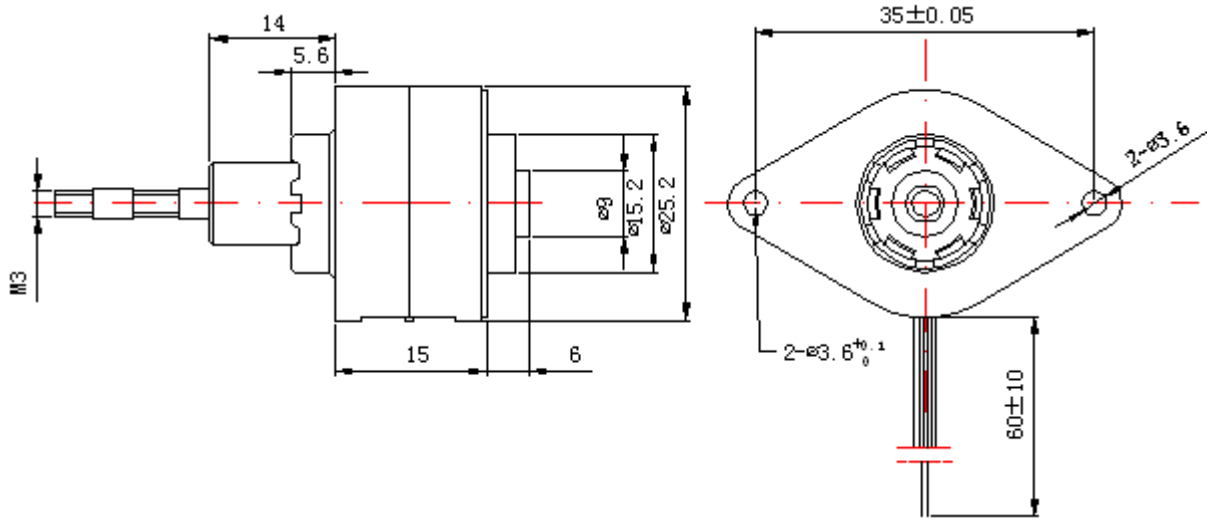


## Standard Leadwire Configuration

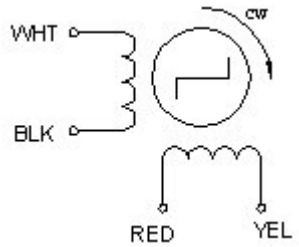


| Wire Color | Step | | | |
|---|---|---|---|---|
| | 1 | 2 | 3 | 4 |
| WHT | - | | | - |
| BLK | | - | - | |
| RED | - | - | | |
| YEL | | | - | - |

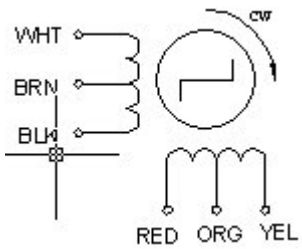


| Wire Color | Step | | | |
|---|---|---|---|---|
| | 1 | 2 | 3 | 4 |
| WHT | - | - | | |
| BRN | + | + | + | + |
| BLK | | | - | - |
| RED | | - | - | |
| ORG | + | + | + | + |
| YEL | - | | | - |

# L252-012 (25mm) LINEAR STEPPER MOTOR DATA

| GERNERAL SPECIFICATIONS |
|---|
| Resistance Accuracy --------- ±10% |
| Inductance Accuracy --------- ±20% |
| Operating Temp Range ------ -40℃~125℃ |
| Storage Temp Range -------- -30℃~80℃ |
| Insulation Resistance ------ >100Mohm Min at 500VDC |
| Life Time ----- 1,500,000 returns (advance 11m, backing out 11mm) |
| Protection Rate ---------- IP34 |
| Lead Wire ---------- AF-200 |

**Picture**




**Electrical Specification**

| Series Model | Rated Voltage (v) | No.of phase | Rated Current (A) | Phase Resistance (ohm) | Phase Inductance (mH) | Travel per Step Avail (mm) | The Mark Thrust (N) | The Mark Pull (N) | After All Journey (mm) | Motor Wgt (g) |
|---|---|---|---|---|---|---|---|---|---|---|
| **L252-01210** | 5 | 2 | 0.23 | 22 | 10.5 | 0.0417 | 10 | 10 | >=12 | 37.4 |
| **L252-01225 -02** | 12 | 2 | 0.23 | 53 | 23.50 | 0.0417 | 25 | 25 | >=12 | 37 |

**Mechanical Dimensions**

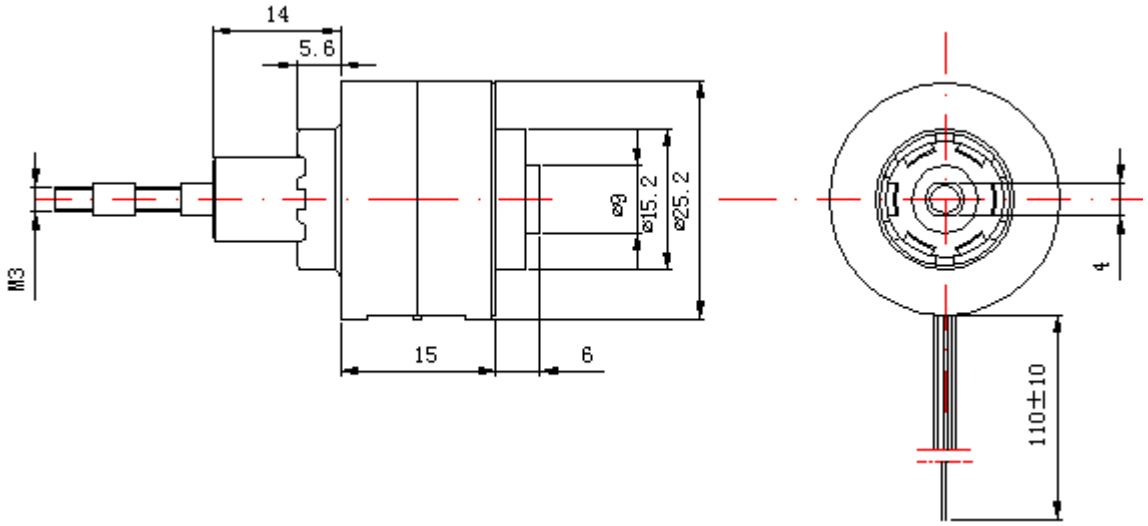


**Standard Leadwire Configuration**

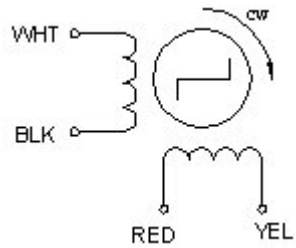


| Wire Color | Step | | | |
|---|---|---|---|---|
| | 1 | 2 | 3 | 4 |
| WHT | - | | | - |
| BLK | | - | - | |
| RED | - | - | | |
| YEL | | | - | - |